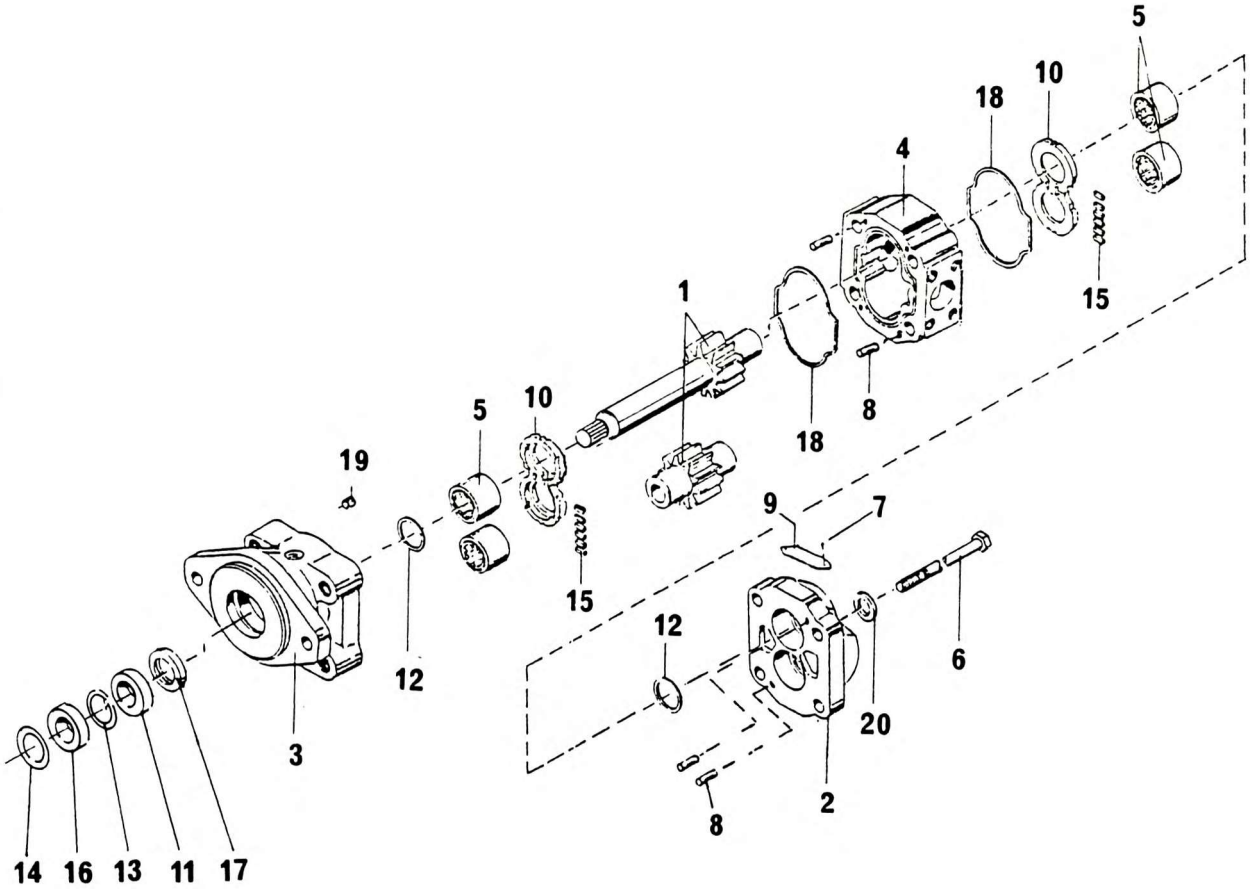

NO.	PART NO.	QTY.	DESCRIPTION
-	7-722-990091	1	Complete Assembly
1	9-722-103640	1	Gear Set
2	8775305	1	Port End Cover
3	9-722-103641	1	Shaft End Cover
4	9-722-103642	1	Gear Housing
5	9-722-101571	4	Bearing
6	9-722-990365	4	Screw
7	9-722-990381	2	Drivescrew
8	9-722-100948	4	Pin Dowel
9	9-722-990369	1	Nameplate
10	9-722-101574	2	Thrust Plate
11	9-722-103638	1	Plate
12	9-722-100835	2	Seal Ring
13	9-722-990371	1	Retaining Ring
14	9-722-102955	1	'O' Ring
15	9-722-990373	1	Seal Strip
16	9-722-103639	1	Seal Lip
17	9-722-100781	1	Seal Lip
18	9-722-100792	2	Gasket
19	8399069	2	Check Valve
20	8777430	4	Washer

Item 15 Seal Strip
1 Strip and 12 Pieces